Hillmar
Hillmar Industries Ltd.
7371 Vantage Way
Delta, BC V4G 1C9
P:604 946-7115 F:604 946-0329
info@hillmar.com www.hillmar.com

COUPLING RKSM
RKSM-170-MSS-LSH-0500-20-2720
SPECIFICATION SHEET
SLS & MKTG
ENGLISH

Sheet Number:	
Job Number:	
Form Number:	429-680-52084PT

Company / Project Reference:	Date.:	Page.:	Document Package No.:	Rev.:
		1 OF 1		

Inventor Drawing

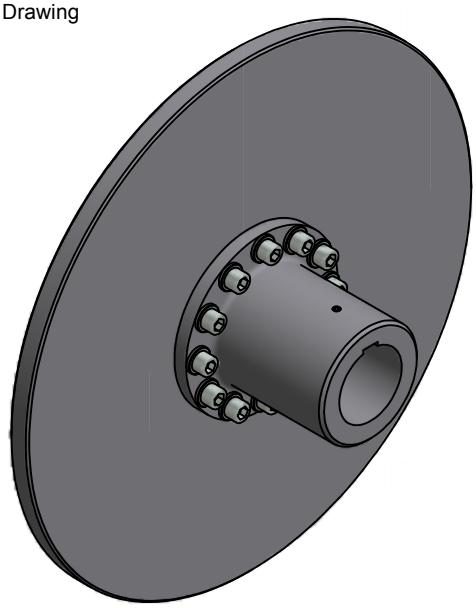

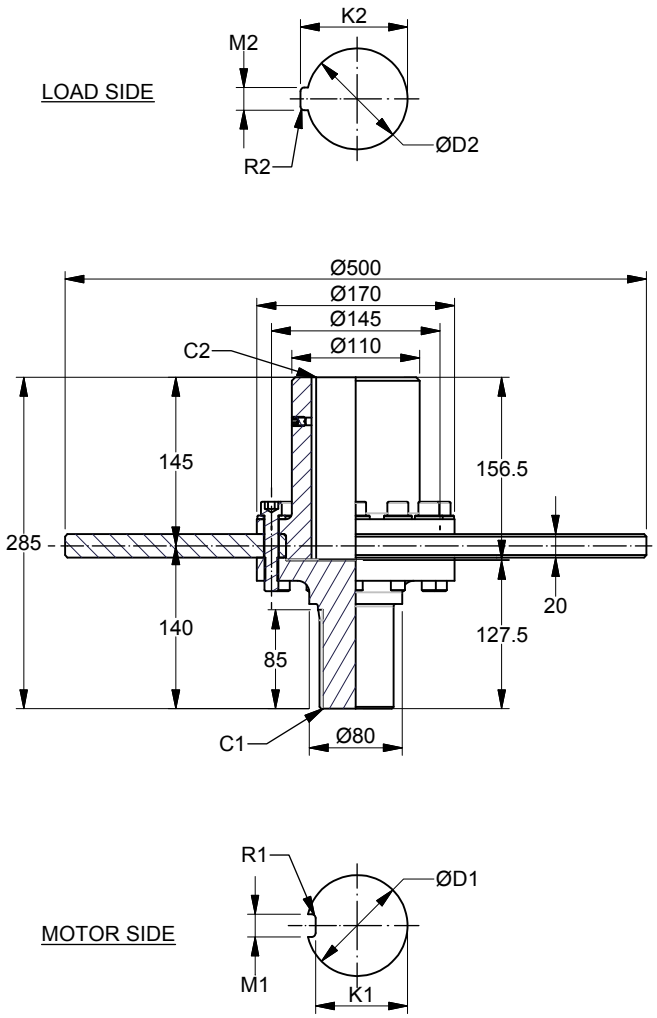

FEATURE	CODE
Rigid coupling	RKSM
Coupling size (Hub OD)	170
Motor side	MSS
Load side	LSH
Disc diameter (mm)	0500
Disc thickness (mm)	20
Maximum coupling torque (Nm)	2720

Examlpe for ordering	RKSM-170-MSS-LSH-0500-20-2720

TECHNICAL DATA

Disc model	SDBD-0500-20-170
Disc diameter (mm)	500
Hub bore size MIN. (mm)	45
D1 MAX. (mm)	75
D2 MAX. (mm)	75
Moment of inertia (kgm^2)	0.99
Mounting bolts	12 x M12
Bolt tightening torque (Nm)	84
MAX. coupling torque TkMAX (Nm)	2720
MAX. coupling speed (RPM)	3250
Weight (kg)	44

CUSTOMER SPECIFICATIONS

Motor side	Load side
D1:_____mm	D2:_____mm
M1:_____mm	M2:_____mm
K1:_____mm	K2:_____mm
R1:_____mm	R2:_____mm
C1:_____mm	C2:_____mm

NOTES

Coupling balancing grade ISO 1940-G6.3 is guaranteed for all coupling parts.

All figures are nominal figures only

All dimensions are in millimeters

Document Template #710-101-62058

** ALL TECHNICAL DATA IS SUBJECT TO CHANGE WITHOUT NOTICE **
Hillmar works have a fully registered ISO 9001-2008 quality assurance programme (QCB #01-1525)

C:\TEMP\a3f49bb3-e10c-4cd0-aed8-26c1c4c1b337\8000052829 6\HILLMAR\HILLMAR PRODUCTION\04 THRUSTER DB\0700-4\07004005 PKM-GKM-RKSM-RKX\SPC-SHT-PKM-GKM-RKSM-RKX\03 RKSM\52084 RKSM-170-MSS-LSH-0500-20-2720.idw